■

XT2055 /

XT2055 USB
MOSFET

4.2V

1/10 XT2055
USB XT2055
2µA XT2055
25µA

■

- PDA MP3
-

■

- 500mA
- MOSFET
-
- /

- USB
- 4.2V ±1%
-
-
- 1/10
- 25µA
- 2.9V
-

■

- SOT-23-6L

■

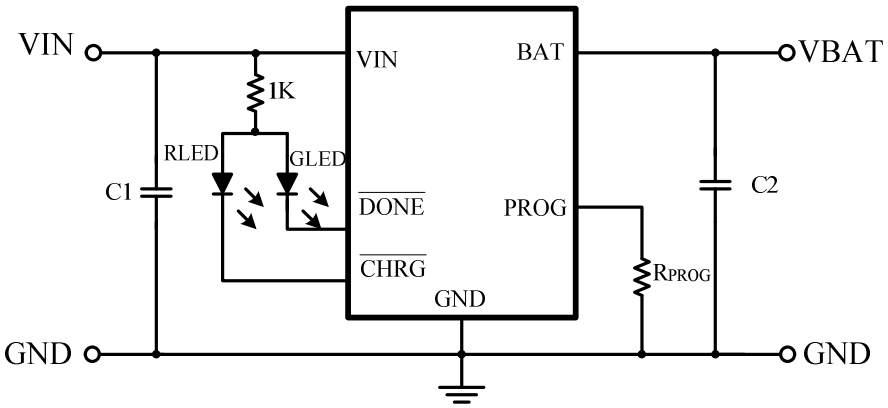

C1=4.7uF C2=10uF IBAT = (V_{PROG}/R_{PROG})*1000

■

m cCpVÖ„E dÖ„E dÑV27PHÕ™47PHÖŒrlbÖŒrlbÕ™2b ˜`b ˜`

b ˜`

12 ' 4.2V

3** **4** VCC 1µF VCC BAT 30 mV

XT2055 BAT 2µA

0%/56 "7 DONE

■

	V_{cc}	V_{SS}-0.3 V_{SS}+10		V
PROG	Vprog	V_{SS}-0.3 V_{cc}+0.3		
BAT	Vbat	Vss-0.3 7		
CHAG	Vchrg	V_{SS}-0.3 V_{SS}+10		
	P_D	SOT-23-6L	250	mW
BAT	Ibat	500		mA
PROG	Iprog	800		uA
	Topa	-40 +85		°C

■

■

1. VS BAT

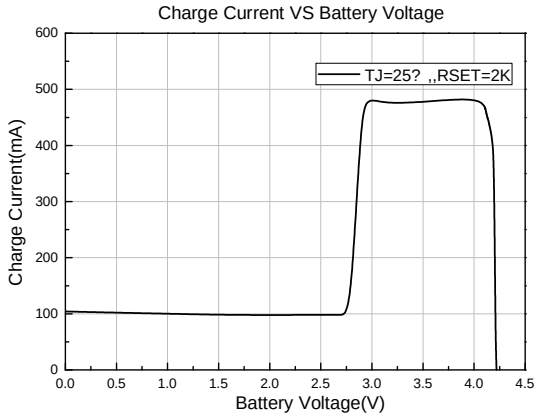
Charge Current VS Battery Voltage
TJ=25? ,,RSET=2K
Charge Current(mA)
Battery Voltage(V)
600
500
400
300
200
100
0
0.0
0.5
1.0
1.5
2.0
2.5
3.0
3.5
4.0
4.5

7. PROG VS

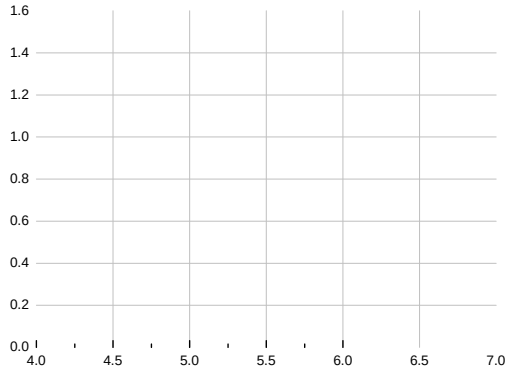

!""

■

- $% & '&()

