XT2106 ˜ L كح LCD ϣ̈
˜ ₮ ˝ MOSFET ˜ ĩ LED
ㄔ ƀ LED
ṗ Ḡ ṗ ψ ˘ ˜
ʷ Ḡ شخ
˜ ₮
XT2106 ضي ٧ ㄔ ą ˜ CE PWM ˜ MOS ㄔ ʷ
ϣ̈ ϣ̈ ∫ 40KHz PWM ϣ̈
˜ ʷ

SOT23-6L
DFN1010-4L

XT2106A -

˜			
		M	SOT23-6L

قمم

(TA=25

LED ω̈

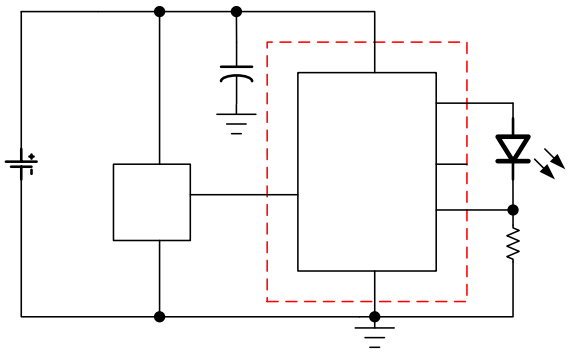

LED ₮ ILED=0.1/RSET

~ 1uF

ÃžíÍ&Ö¾ L ω̈ 50KHz

LED

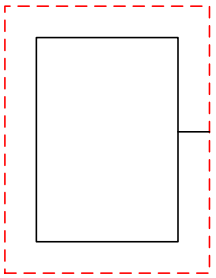

18 BDF7 9 TT BT9( ) 1 R11 0 0 1 103Tm [<127F36FC07791] TJ ET EMC /P <</MCID 27>>0BDC18 BDF7 9 TT 1 0 1 136.

SOT23-6L

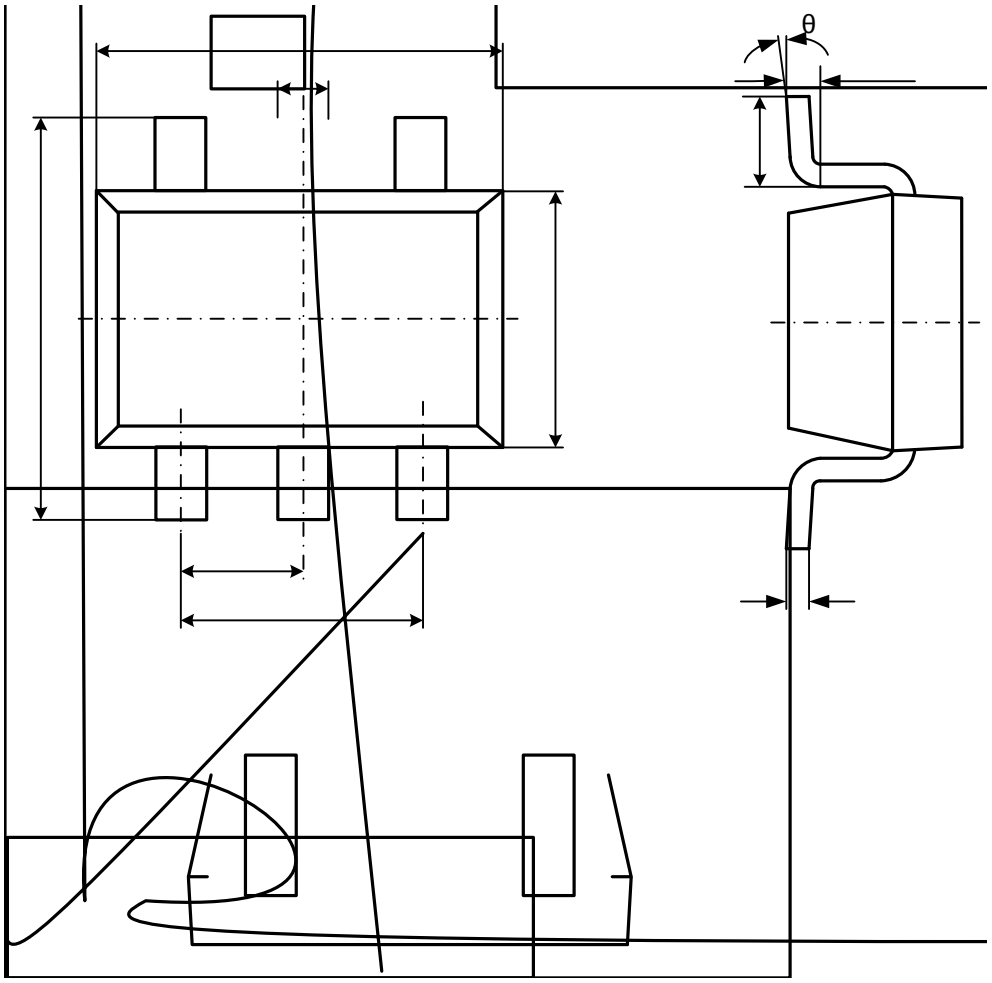

Symbol	Dimensions In Millimeters	Dimensions In Inches