SOT23-5L	
1	CHRG
2	GND
3	BAT
4	VIN
5	DONE
6	PROG

CHG CHRG N MOSFET CHRG
XT4096 CHRG
GND
BAT 4.2V
VBAT ESD GND BAT 0.7mA
DONE DONE DONE
VIN
PROG 1%
1.2V IBAT = (1.2/RPROG) × 1000

SOT-23-6L

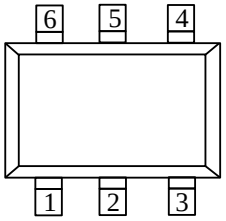

SOT-23-6L
(Top View)

D6	XT4096

	VBAT	VBAT
A	4.2V	± 1%

0



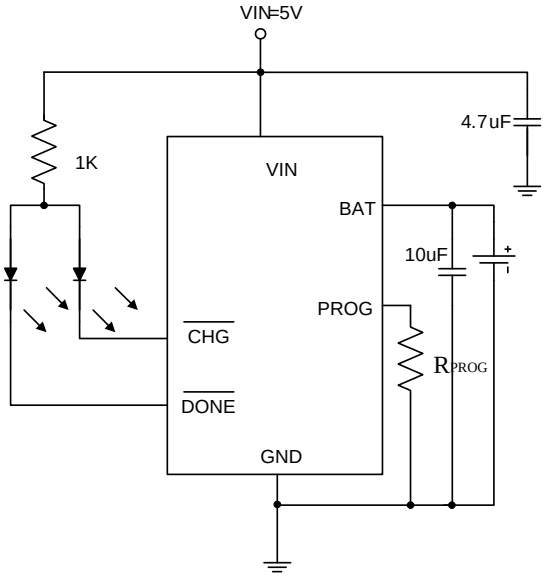

IBAT = (1.2/R_{PROG})*1000

CHRG 4ø				
DONE 55µ				

1.BAT

Vin=5V Rpog=2K VBAT IBAT

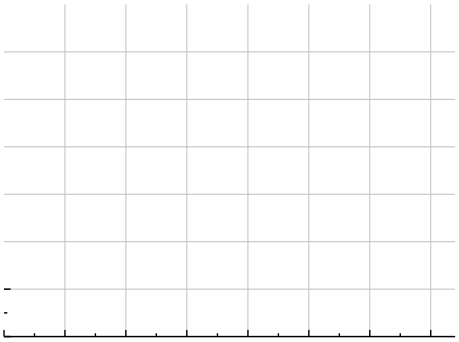

2.BATT

Vin=5V Rpog=2K VBAT=3.6V

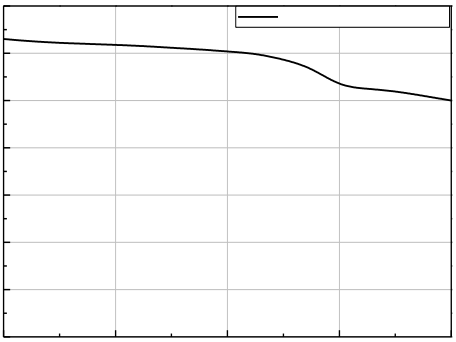

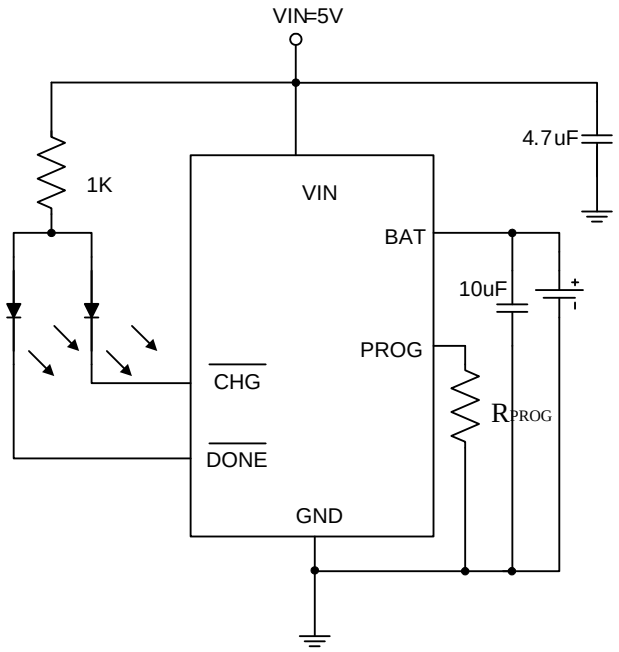

IBAT = 1200 / RPROG IBAT RPROG IREF

500

RPROG = 1200/0.5 = 2.4K

RPROG 1%

4.7uF 10uF PCB

SOT23-6L

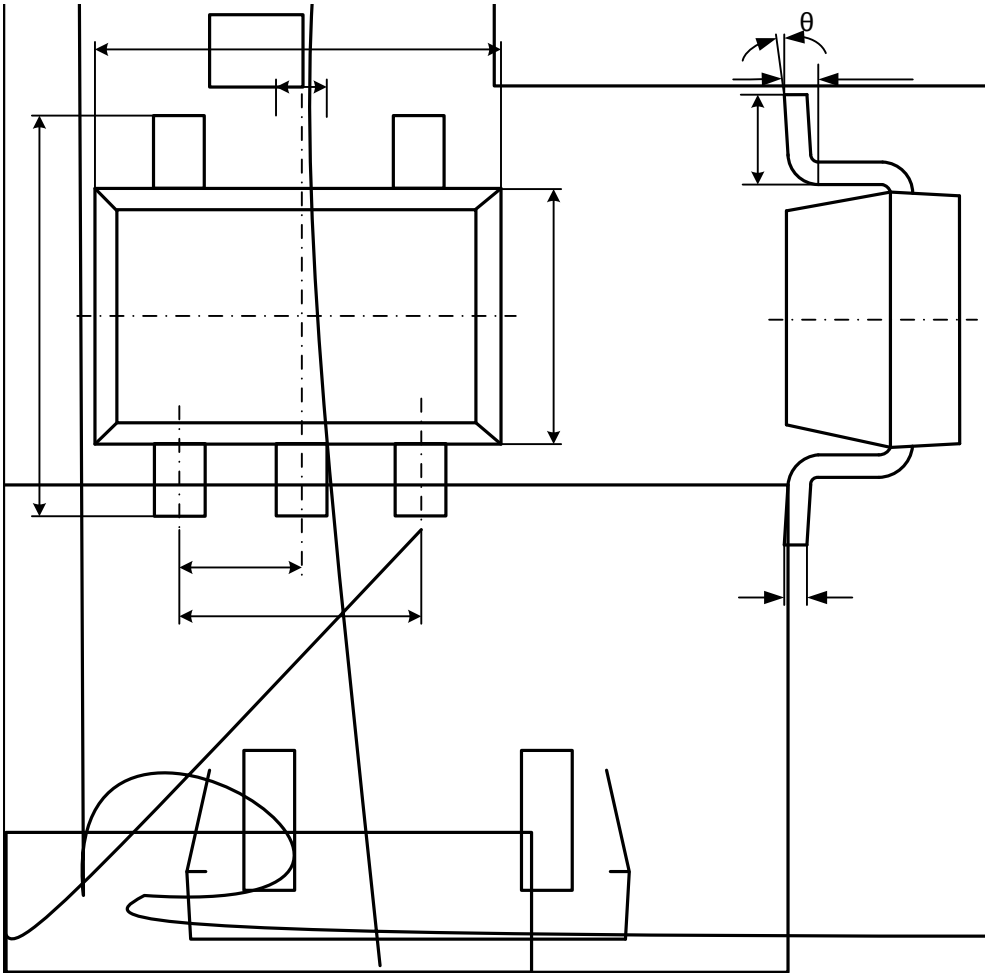

Symbol	Dimensions In Millimeters		Dimensions In Inches	
	Min	Max	Min	Max
A	1.050	1.250	0.041	0.049
A1	0.000	0.100	0.000	0.004
A2	1.050	1.150	0.041	0.045
b	0.300	0.500	0.012	0.020
c	0.100	0.200	0.004	0.008
D	2.820	3.020	0.111	0.119
E	1.500	1.700	0.059	0.067
E1	2.650	2.950	0.104	0.116
e	0.950(BSC)		0.037(BSC)	
e1	1.800	2.000	0.071	0.079
L	0.300	0.600	0.012	0.024
θ	0°			