V 1.0 2021

**PDFN5*6-8L**




PDFN5*6-8L
(TOP VIEW)

XXXX

| | | | |
|---|---|---|---|
| | | | |

| | | | | | | UNIT |
|---|---|---|---|---|---|---|
| | VIN | | | | 26.5 | V |
| | Icc | Charge mode,Rprog=2.4K | | 700 | 1000 | μA |
| | | Shutdown mode Rprog=2.4K TS disabled | | 115 | 200 | μA |

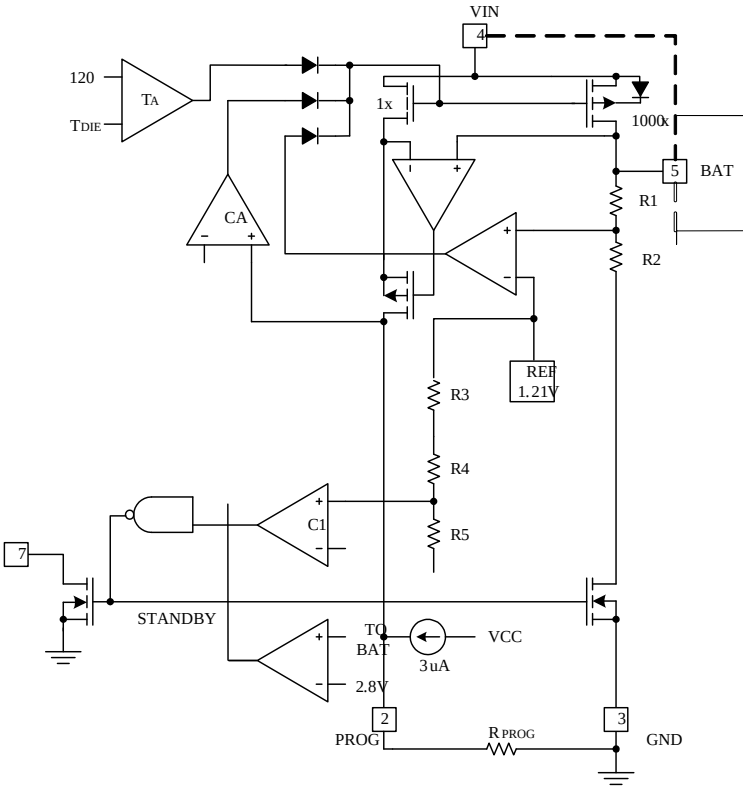


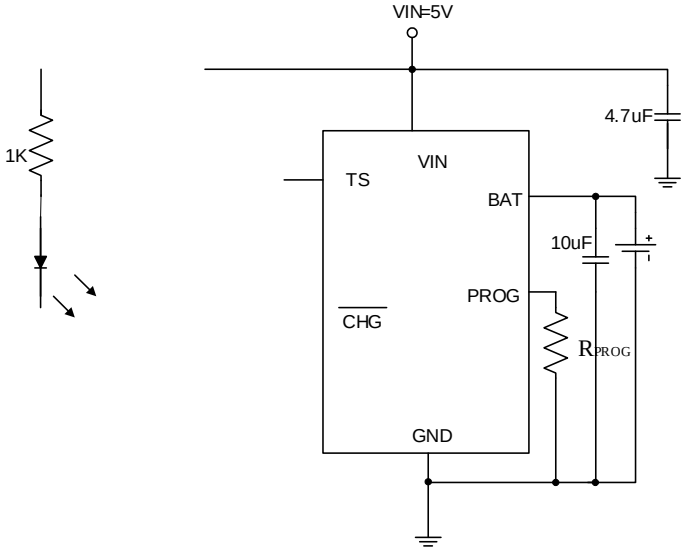


IBAT = (1.2/$R_{PROG}$)*1000

| | | | | |
|---|---|---|---|---|
| CHRG | | | | |
| DONE | | | | |

1.BAT

Vin=5V Rpog=2K VBAT IBAT

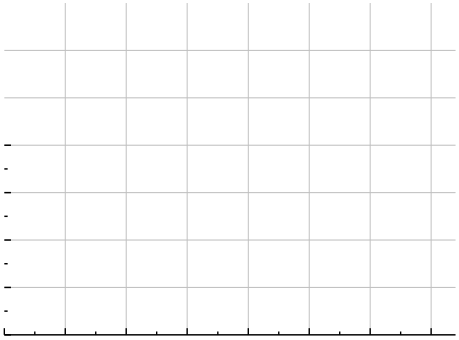

2.BATT

Vin=5V Rpog=2K VBAT=3.6V

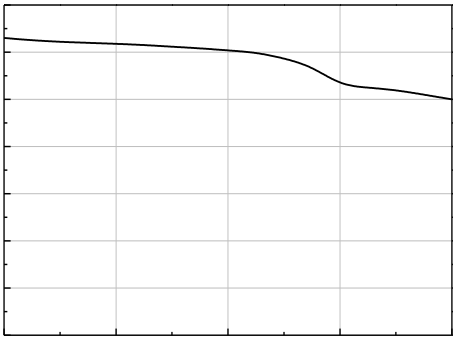

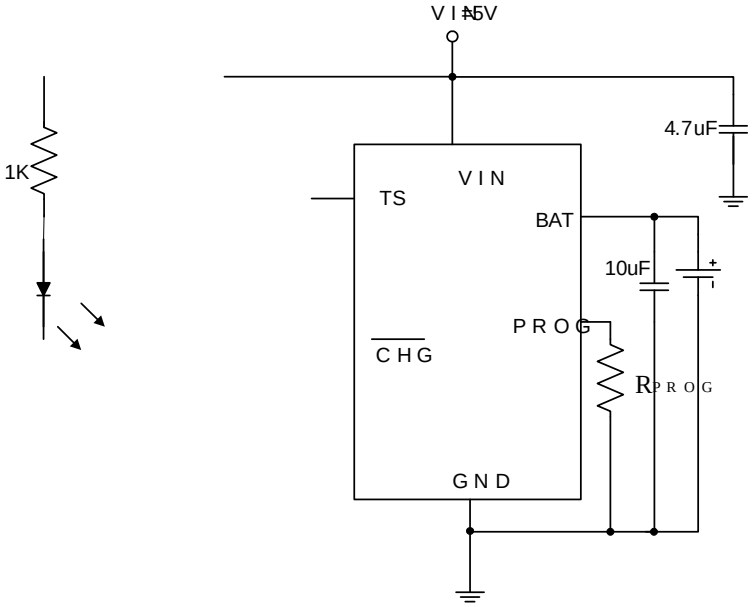


IBAT = 1200 / RPROG IBAT RPROG IREF

500 RPROG = 1200/0.5 = 2.4K

RPROG 1%

**R1 R2**

R1 R2 TL

TH TL TH) NTC RTL TL RTH TH

RTL RTH TL TEMP

$$V_{TEMPL} = \frac{R_2 // R_{TL}}{R_1 + R_2 // R_{TL}} \times Vin$$

TH TEMP $V_{TEMPH} = \frac{R_2 // R_{TH}}{R_1 + R_2 // R_{TH}} \times Vin$

$$VTEMPL = VHIGH = K2 \times VIN(K2 = 0.5)$$

$$V_{TEMPH} = V_{LOW} = K1 \times V_{IN}(K1 = 0.3)$$

$$R1 = \frac{R_{TL}R_{TH}(K2 - K1)}{(R_{TL} - R_{TH})K1K2}$$

$$R2 = \frac{R_{TL}R_{TH}(K2 - K1)}{R_{TL}(K1 - K1K2) - R_{TH}(K2 - K1K2)}$$

PTC RTH RTL

$$R1 = \frac{R_{TL}R_{TH}(K2 - K1)}{(R_{TH} - R_{TL})K1K2}$$

$$R2 = \frac{R_{TL}R_{TH}(K2 - K1)}{R_{TH}(K1 - K1K2) - R_{TL}(K2 - K1K2)}$$

$V_{IN}$ R1 R2 $R_{TH}$ $R_{TL}$ $R_{TH}$ $R_{TL}$

R2 R1 R1

4.7uF 10uF PCB

**RS**

RS TS 20K