Over Voltage and Over Current Protection IC

General Description

The LP5305A is a highly integrated circuits, it used to protect low voltage system from abnormal high input voltage. The IC continuously check the input voltage, the input current, and the battery voltage. When the protection status is occur, the power MOS will turn off at the same time. The LP5305A is safety devices to ensure worked against accidents.

In case of the input voltage exceeds a OVP threshold

The current limit can is adjustable by external resistor between ISET and GND. And the current is also limited to prevent charging the battery with an excessive current. The LP5305A also monitors the Li-ion battery voltage, when the battery voltage exceeds 4.35V, the IC will turn off the MOS.

Other features include over temperature protection and under-voltage lockout (UVLO). The LP5305A is available in a space saving DFN-8 package.

Features

Withstand High Input Voltage Up to 26V
Adjustable Over Current Protection
Input Over Voltage Protection
Battery Over Voltage Protection
High Accuracy Protection Thresholds
Fault Signal Output
Enable Control
Under Voltage Lockout
Output Short-Circuit Protection
Over-Temperature Protection
Available in DFN-8
RoHS Compliant and Halogen Free 1.8 0 P1 8 C S2 cs 0 0

Order Information

LP5305A
- F: Green
- Package Type
  - QV: DFN-8

LP5305A	LPS P5305A YWX	DFN-8	4K/REEL
Y: Y is year code. W: W is week code. X: X is series number.			

LP Semi LowPowerSemi 微源半導體

Function Block Diagram

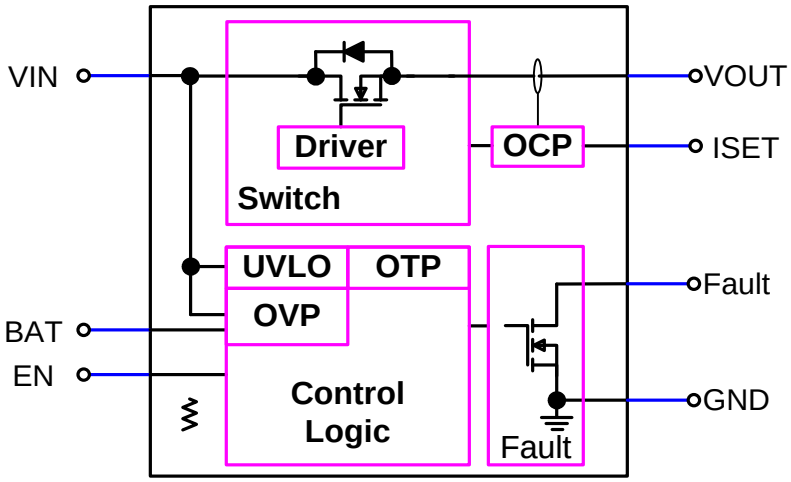

Absolute Maximum Ratings Note1

VIN to GND	-0.3V to +30V
VOUT to GND	-0.3V to +7V
All Other Pin to GND	-0.3V to +7V
Operating Junction Temperature Range (T_J)	-40 to 150
Operation Ambient Temperature Range	-40°C to +105°C
Storage Temperature Range	-65°C to +150°C
Maximum Soldering Temperature (at leads, 10sec)	+260°C

Note1. Stresses beyond those listed under “Absolute

LowPowerSemi 微源半導體

Application Information

The LP5305A devices monitor the input voltage, battery voltage, and output current to protect the charging system of a Li-Ion battery. When enabled, the system is protected against input overvoltage by turning off an internal switch, immediately removing power from the charging circuit. For an over-current condition, the device limits the output current at the setting value, and if the over-current persists, the switch will turn off after a blanking time. Additionally, the device also monitors its own temperature and switches off if device too hot..

Under Voltage Lockout (UVLO)

The LP5305A had an UVLO internal circuit that enable the device once the voltage on the V_{IN} voltage exceeds the UVLO threshold voltage.

Input Over Voltage Protection

The LP5305A Input has an over voltage protection to protect the battery charging system. When the VIN voltage rises above 5.1V(Typ.), the system will turns the switch off.

Battery Over Voltage Protection

The battery overvoltage threshold V_{BOVP} is internally set to 4.35V. If the battery voltage exceeds the threshold, the switch is turned off, and the Fault pin is go low. Once the battery voltage drops to (V_{BOVP}-$_{BOVP}$), the switch is turned back on. And the switch is turned off permanently, when battery overvoltage occurs 15 times in one charge cycle. For cleared this event, the VIN power or EN need to re-cycled.

Over Temperature Protection

The LP5305A device enters over temperature protection(OTP) if its junction temperature exceeds 140°C (Typ.). During over temperature protection none of the device's functions are available. To resume normal operation the junction temperature need cool down, and the outputs will restart.

Enable Control

The LP5305A has an enable pin which can be used to enable or disable the device. When the EN pin is driven high, the switch is turned off. The EN pin has an internal pull-down resistor can be floating.

Fault Flag

The FAULT pin is open-drain output.

Input Over Voltage
Output Over Current
Battery Over Voltage
Over Temperature

Over Current Protection

The Over Current threshold can adjustable by a external resistor RSET connected from the ISET pin to GND. The equation is apply under below:

$$I_{OCP}=25000\div R_{SET}$$

If the output current exceed the I_{OCP} threshold, the device limits the current for a blanking duration of T_{OC}. If the over current situation exceeds the T_{OC}, the switch will turned off, and the Fault pin is go low. The switch will re-soft start again after T_{OCR}. And the switch is turned off permanently, when over current event occurs 15 times in one charge cycle. For cleared this event, the VIN power or EN need to re-cycled

Layout Consideration

The proper PCB layout and component placement are critical for all circuit. LP5305A is meant to protect downstream circuit. Here are some suggestions to the layout design.

1. Connected all ground together with one uninterrupted ground plane, which include power ground and analog ground.
2. The input and output capacitor should be located as closed as possible to the chip and ground plane.
3. Other components should be located close to the chip.

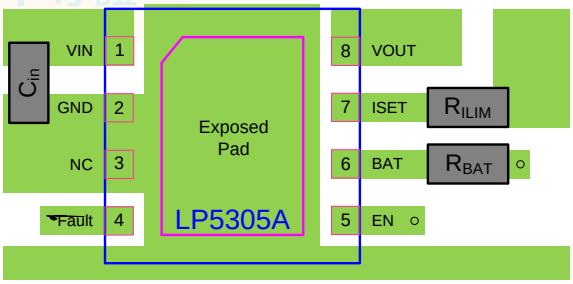

Outline Information

DFN-8 Package -