AMS1117

800mA LOW DROPOUT VOLTAGE REGULATOR

FEATURES

- Three Terminal Adjustable or Fixed Voltages* 1.2V, 1.8V, 2.5V, 2.85V, 3.3V, 5.0V and ADJ
- Output Current of 800mA
- Operates Down to 1V Dropout
- Line Regulation: 0.2% Max.
- Load Regulation: 0.4% Max.
- SOT-223 and TO-252,SOT-89 package available

APPLICATIONS

- High Efficiency Linear Regulators
- Post Regulators for Switching Supplies
- 5V to 3.3V Linear Regulator
- Battery Chargers
- Active SCSI terminators
- Power Management for Notebook
- Battery Powered Instrumentation

GENERAL DESCRIPTION

The AMS1117 series of adjustable and fixed voltage regulators are designed to provide 800mA output current and to operate down to

ABSOLUTE MAXIMUM RATINGS (Note 1)

Power Dissipation	Internally limited
Input Voltage	15V
Operating Junction Temperature	
Control Section	0℃ to 125℃
Power Transistor	0℃ to 125℃
Storage temperature	-65℃ to +150℃
Soldering information	
Lead Temperature (10 sec)	300℃
Thermal Resistance	
鏆釋瀜鱙餫梱靈　甂買涿	

ELECTRICAL CHARACTERISTICS

Electrical Characteristics at I_{OUT}=0mA, and T_J=+25°C unless otherwise specified.

Parameter	Device	Conditions	Min	Typ	Max	Units
Load Regulation (Note 2,3)	AMS1117-2.85	V_{IN} =5V, 0≤I_{OUT} ≤800mA		3 6	12 20	mV mV
	AMS1117-3.3	V_{IN} =5V, 0≤I_{OUT} ≤800mA		3 7	15 25	mV mV
	AMS1117-5.0	V_{IN} =8V, 0≤I_{OUT} ≤800mA		5 10	20 35	mV mV
Dropout Voltage (V_{IN} - V_{OUT})	AMS1117-1.2/-1.8/-2.5/-2.85/-3.3/-5.0	ΔV_{OUT}, ΔV_{REF}=1%,0≤I_{OUT} =800mA (Note 4)		1.1	1.3	V
Current Limit	AMS1117-1.2/-1.8/-2.5/-2.85/-3.3/-5.0	(V_{IN} - V_{OUT})=5V	900	1,100	1,500	mA
Minimum Load Current	AMS1117	(V_{IN} - V_{OUT})=12V (Note 5)		5	10	mA
Quiescent Current	AMS1117-1.2/-1.8/-2.5/-2.85/-3.3/-5.0	V_{IN} ≤12V		5	10	mA
Ripple Rejection	AMS1117	f=120Hz, C_{OUT}=22µF Tantalum, I_{OUT}=800mA, (V_{IN} - V_{OUT})=3V, C_{ADJ}=10µF	60	75		dB
	AMS1117-1.2/-1.8/-2.5/-2.85	f=120Hz, C_{OUT}=22µF Tantalum, I_{OUT}=800mA, V_{IN} =6V	60	72		dB
	AMS1117-3.3	f=120Hz, C_{OUT}=22µF Tantalum, I_{OUT}=800mA, V_{IN}=6.3V	60	72		dB
	AMS1117-5.0	f=120Hz, C_{OUT}=22µF Tantalum, I_{OUT}=800mA, V_{IN}=8V	60	68		dB
Thermal Regulation	AMS1117	T_A=25°C, 30ms pulse		0.008	0.04	%W
Adjust Pin Current	AMS1117	10mA≤I_{OUT} ≤800mA, 1.5≤(V_{IN}-V_{OUT}) ≤12V		55	 120	µA µA
Adjust Pin Current Change	AMS1117	10mA≤I_{OUT}≤800mA, 1.5V≤(V_{IN} - V_{OUT}) ≤12V		0.2	5	µA
Temperature Stability				0.5		%
Long Term Stability		T_A=125°C,1000Hrs		0.3	1	%
RMS Output Noise (% of V_{OUT})		T_A=25°C,10Hz≤f≤10kHz		0.003		%
Thermal Resistance Junction-to-Case					15	°C/W

Parameters identified with boldface type apply over the full operating temperature range.

Note 1: Absolute Maximum Ratings indicate limits beyond which damage to the device may occur. For guaranteed specifications and test conditions, see the Electrical Characteristics. The guaranteed specifications apply only for the test conditions listed.

Note 2: Line and Load regulation are guaranteed up to the maximum power dissipation of 1.2W. Power dissipation is determined by the input/output differential and the output current. Guaranteed maximum power dissipation will not be available over the full input/output range.

Note 3: See thermal regulation specifications for changes in output voltage due to heating effects. Line and load regulation are measured at a constant junction temperature by low duty cycle pulse testing. Load regulation is measured at the output lead~1/8" from the package.

Note 4: Dropout voltage is specified over the full output current range of the device.

Note 5: Minimum load current is defined as the minimum output current required to maintain regulation. When 1.5V ≤(V_{IN}-V_{OUT}) ≤12v the device is guaranteed to regulate if the output current is greater than 10mA.

APPLICATION HINTS

The AMS1117 series of adjustable and fixed regulators are easy to use and are protected against short circuit and thermal overloads. Thermal protection circuitry will shut-down the regulator should the junction temperature exceed 165℃ at the sense point.

Pin compatible with older three terminal adjustable regulators, these devices offer the advantage of a lower dropout voltage, more precise reference tolerance and improved reference stability with temperature.

Stability

The circuit design used in the AMS1117 series requires the use of an output capacitor as part of the device frequency compensation. The addition of 22μF solid tantalum on the output will ensure stability for all operating conditions.

When the adjustment terminal is bypassed with a capacitor to improve the ripple rejection, the requirement for an output capacitor increases. The value of 22 μF tantalum covers all cases of bypassing the adjustment terminal. Without bypassing the adjustment terminal smaller capacitors can be used with equally good results.

To ensure good transient response with heavy load current

APPLICATION HINTS

Connected as shown, R_P is not multiplied by the divider ratio

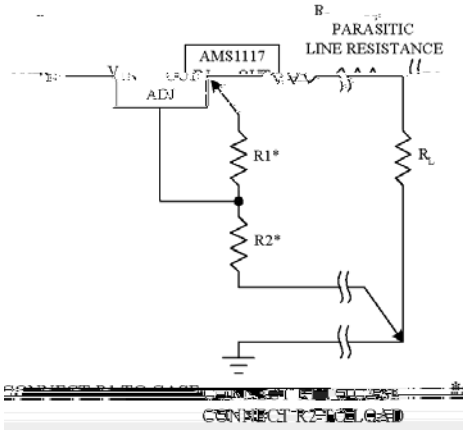

Figure 3. Connections for Best Load Regulation

In the case of fixed voltage devices the top of R1 is connected Kelvin internally, and the ground pin can be used for negative side sensing.

Thermal Considerations

The AMS1117 series have internal power and thermal limiting circuitry designed to protect the device under overload conditions. However maximum junction temperature ratings of 125°C should not be exceeded under continuous normal load conditions.

Careful consideration must be given to all sources of thermal resistance from junction to ambient. For the surface mount package SOT–223 additional heat sources mounted near the device must be considered. The heat dissipation capability of the PC board and its copper traces is used as a heat sink for the device. The thermal resistance from the junction to the tab for the AMS1117 is 15°C/W. Thermal resistance from tab to ambient can be as low as 30°C/W.

The total thermal resistance from junction to ambient can be as low as 45°C/W. This requires a reasonable sized PC board with at least on layer of copper to spread the heat across the board and couple it into the surrounding air.

Experiments have shown that the heat spreading copper layer does not need to be electrically connected to the tab of the device. The PC material can be very effective at transmitting heat between the pad area, attached to the pad of the device, and a ground plane layer either inside or on the opposite side of the board. Although the actual thermal resistance of the PC material is high, the length/Area ratio of the thermal resistance between layers is small. The data in table 1, was taken using 1/16” FR-4 board with 1 oz. Copper foil, and it can be used as a rough guideline for estimating thermal resistance.

For each application the thermal resistance will be affected by thermal interactions with other components on the board. TO determine the actual value some experimentation will be necessary.

The power dissipation of the AMS1117 is equal to:

$P_D=(V_{IN}-V_{OUT})(I_{OUT})$

Maximum junction temperature will be equal to:

$T_J=T_{A(MAX)} + P_D$

1A(M60.00035 4-0.0021 Tc 0.1376 Tw -17.02 0 0 Tm (9(an)-5.1()-13.Re5.1(nction 68 (l to:)]T–to-7(mountTm 331 TD[Maximum junction temp.00-5.3(a

TYPICAL PERFORMANCE CHARACTERISTICS

Minimum Operating Current (Adjustable Device)

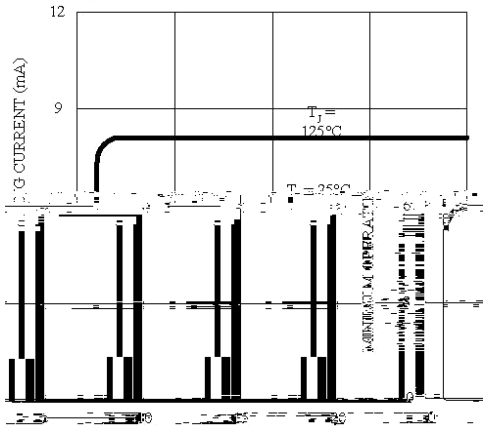

INPUT/OUTPUT DIFFERENTIAL (V)

Load Regulation

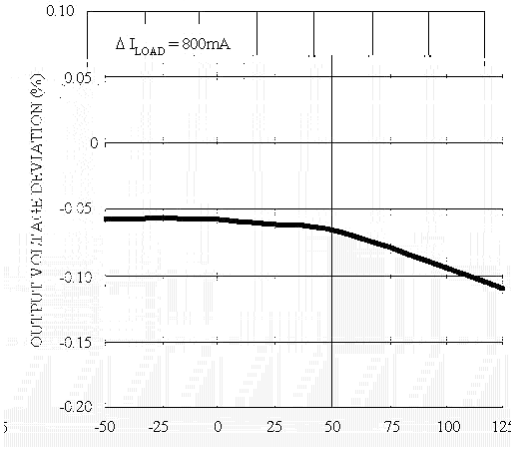

TEMPERATURE (°C)

Temperature Stability

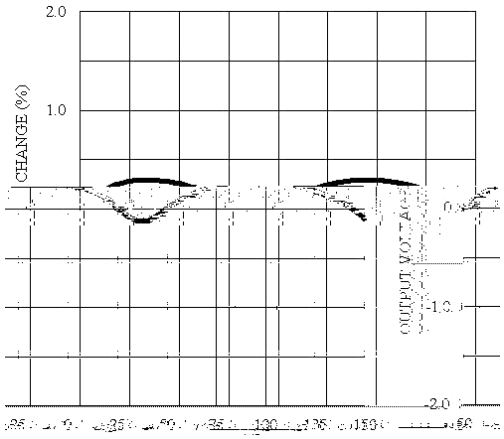

TEMPERATURE (°C)

Short-Circuit Current

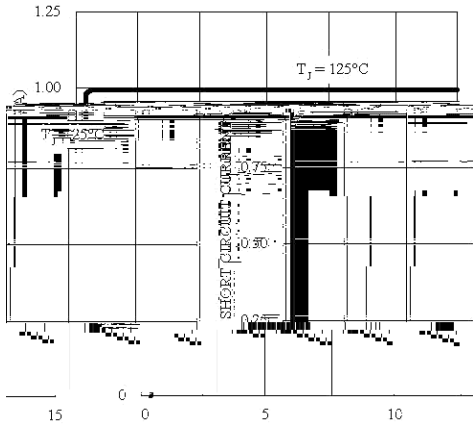

INPUT/OUTPUT DIFFERENTIAL

Ripple Rejection vs. Current

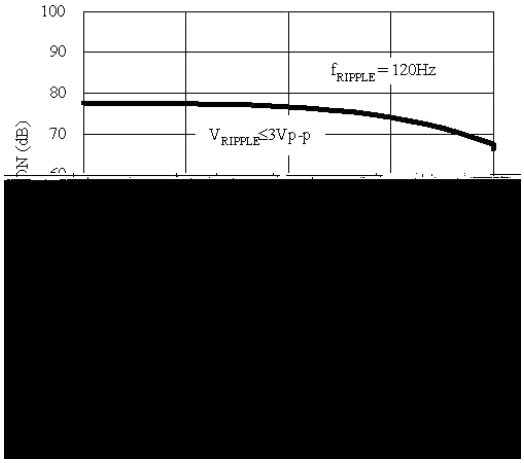

OUTPUT CURRENT (A)

Adjust Pin Current

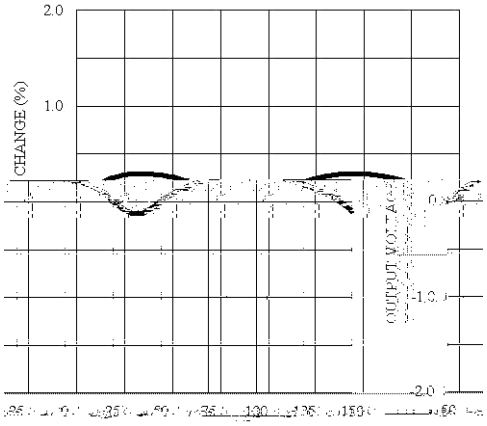

TEMPERATURE(°C)

PACKAGE DIMENSIONS inches (millimeters) unless otherwise noted.

TO-252 PLASTIC PACKAGE (D)

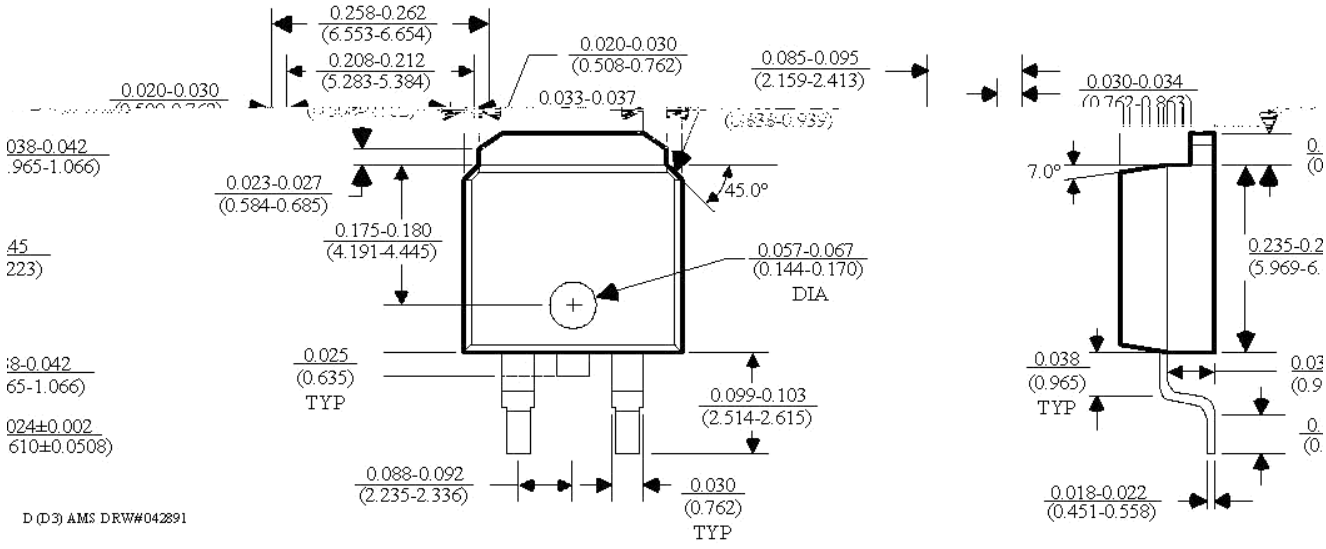

3 LEAD SOT-223 PLASTIC PACKAGE

